CAD FILE:

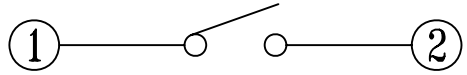

SCHEMATIC

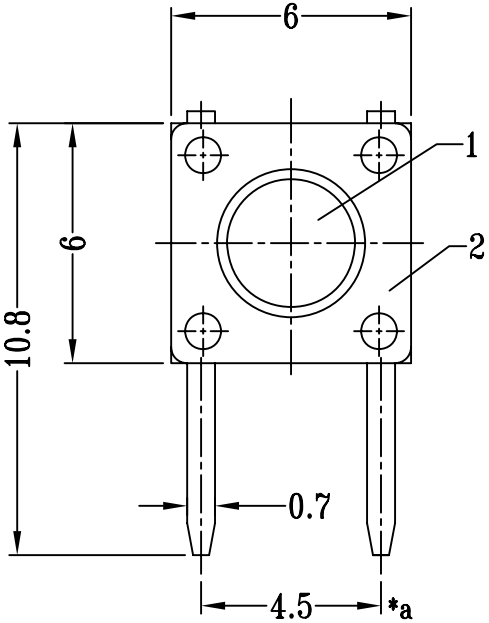

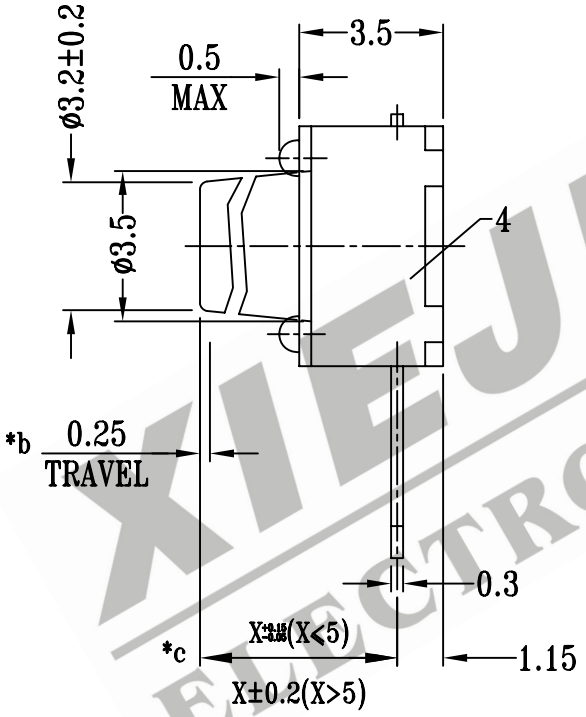

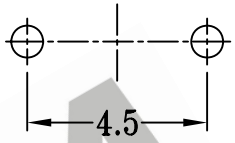

P.C.B LAYOUT

TC-0508	TC0105 KNOB	6.15
TC-0507	TC0109 KNOB	11.35
TC-0506	TC0106 KNOB	6.85
TC-0505	TC0108 KNOB	8.35
TC-0504	TC0104 KNOB	5.85
TC-0503	TC0103 KNOB	3.85
TC-0502	TC0102 KNOB	3.15
MODEL NO.	KNOB NAME	X

OPERATING FORCE	CODE
100gf	T
130gf	V
160gf	X
170gf	W
190gf	Y
250gf	Z

注："*"表示关键尺寸（3个）

NO.	PART NAME	MATERIAL	Q'TY	FINISHING
8				
7				
6				
5				
4	CASE	PBT/BRASS STRIP	1	BLACK/Ag PLATED
3	CONTACT	SEE CONTACT CHART	1	Ag CLAD
2	COVER	ZINC PLATE	1	WASHING
1	KNOB	POM	1	SEE KNOB CHART

TOLERANCE UNLESS SPECIFIED
WITHIN: 1.5±0.1mm
OVER : 1.5±0.2mm

SHENZHEN XIEJIA ELECTRONICS CO.,LTD.

ISSUE	DATE	DESCRIPTIONS	APPD.

TITLE : TACT SWITCH

UNIT : MM

DRWG NO.: XJ-DR-TC0502-00

MODEL: TC-0502~0508

SCALE: 5 : 1

DWN.	ZHOUYU	2001-12-28
CHK'D	FANGYING	2001-12-28
APPD.	KANGXINAN	2001-12-28

ALL MATERIALS MUST BE COMPLIANT TO ROHS

XIEJIA ELECTRONICS